MXG4-40CS

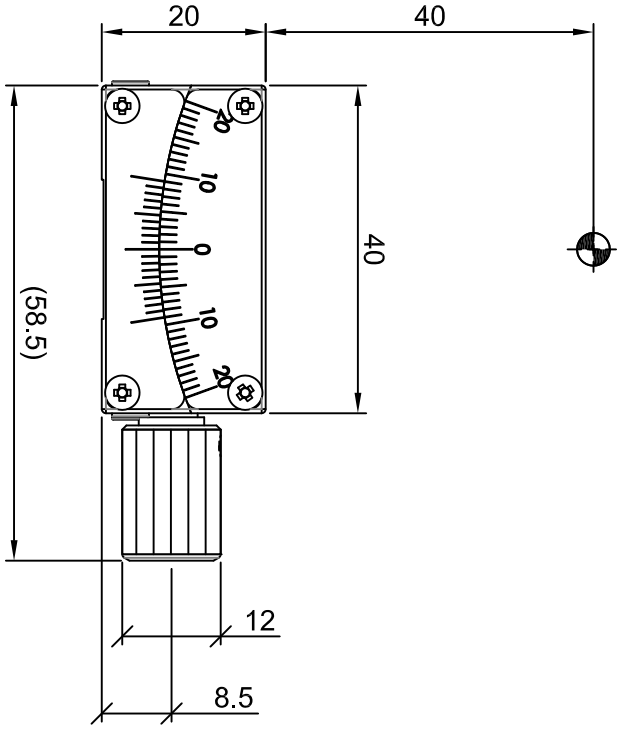
20
40
40
(58.5)
12
8.5
20
10
0
10
20

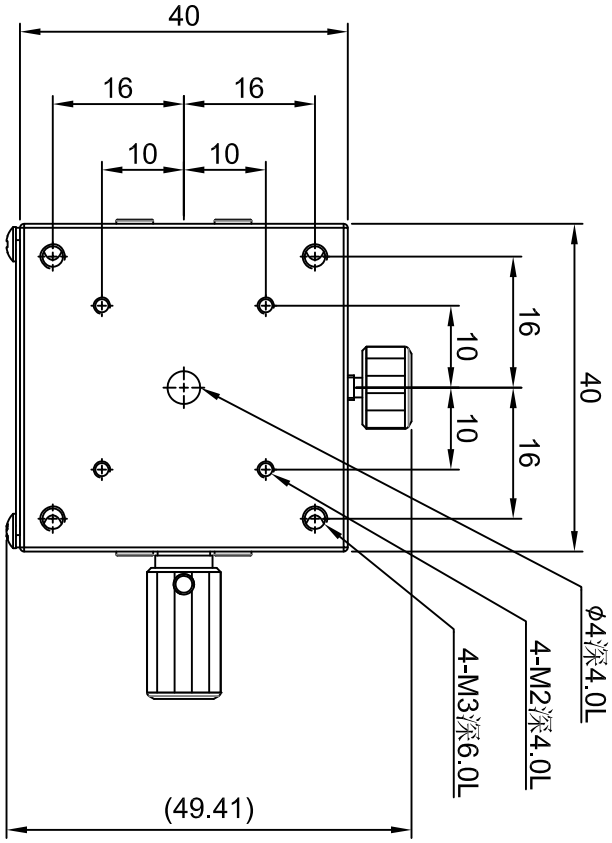
40
16
16
10
10
16
10
10
16
40
(49.41)
φ4深4.0L
4-M2深4.0L
4-M3深6.0L

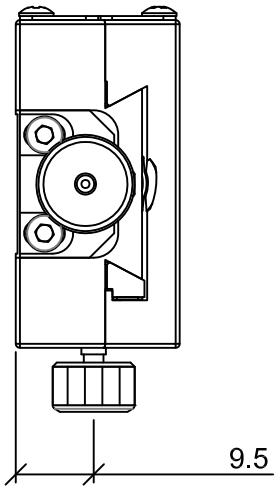
9.5

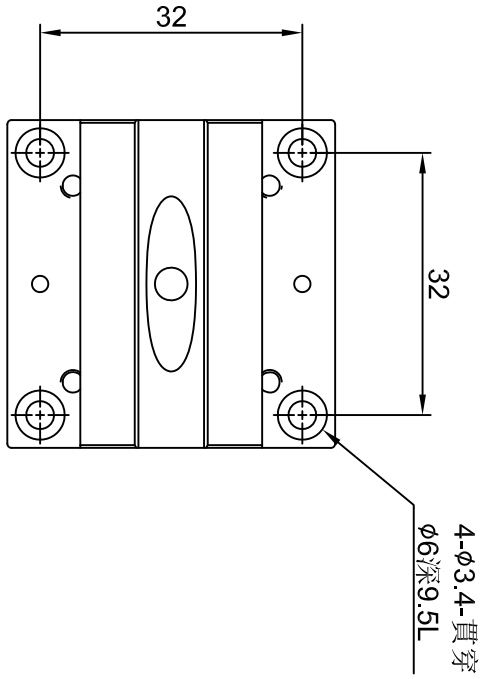
32
32
4-φ3.4-貫穿
φ6深9.5L